Project		Catalog #		Type	
Prepared by		Notes		Date	

McGraw-Edison
GALN Galleon II

Area / Site Luminaire

Product Features

Light ARchitect™ · BAA · FADC

Product Certifications

ISO · DLC Listed[1] · DLC Listed Premium[1] · 3G VIB · IP66 · UL Certified · IDA[2] · 5 Year

Interactive Menu

- Ordering Information page 2
- Mounting Details page 3
- Optical Distributions page 5
- Product Specifications page 5
- Energy and Performance Data page 6
- Control Options page 13

Quick Facts

- Lumen packages range from 3,300 - 99,100 (33W - 658W)
- 17 optical distributions
- Efficacy up to 171 lumens per watt

Connected Systems

- Wavelinx LITE Wireless
- Wavelinx PRO Wireless
- AirMesh Wireless

Dimensional Details

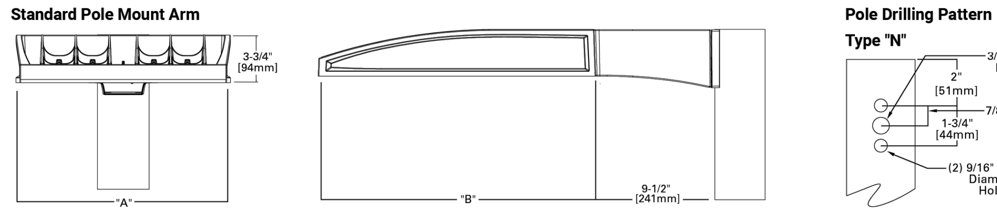

Number of Light Squares	Width "A"	Housing Length "B"	Weight with Standard or QM Arm	EPA with Standard or QM Arm
1-4	16"	22"	29 lb	0.95
5-6	22"	22"	39 lb	0.95
7-9	22"	28-1/8"	48 lb	1.1

NOTES: For arm selection requirements and additional line art, see Mounting Details section.

NOTES:
1. Visit https://www.designlights.org/search/ to confirm qualification. Not all product variations are DLC qualified.
2. IDA Certified (3000K CCT and warmer only, fixed mounting options)

McGraw-Edison — GALN Galleon II

Ordering Information

SAMPLE NUMBER: **GALN-SA4C-740-U-T4FT-GM**

Product Family [1,2]	Light Engine Configuration: Light Square	Light Engine Configuration: Square Count	Light Engine Configuration: Lumen Output	Color Temperature	Voltage	Distribution	Mounting	Finish
GALN=Galleon II **BAA-GALN**=Galleon II Buy American Act Compliant [26] **TAA-GALN**=Galleon II Trade Agreements Act Compliant [26]	**SA**=16 LED Light Square **SB**=26 LED Light Square[35]	**1**=1 Light Square **2**=2 Light Squares **3**=3 Light Squares **4**=4 Light Squares **5**=5 Light Squares **6**=6 Light Squares **7**=7 Light Squares **8**=8 Light Squares **9**=9 Light Squares	**A**=Output Level 1 **B**=Output Level 2 **C**=Output Level 3 **D**=Output Level 4 [4,16] **Z**=Configured Output[32]	**722**=70CRI, 2200K **727**=70CRI, 2700K **730**=70CRI, 3000K **735**=70CRI, 3500K **740**=70CRI, 4000K **750**=70CRI, 5000K **760**=70CRI, 6000K **827**=80CRI, 2700K **830**=80CRI, 3000K **835**=80CRI, 3500K **840**=80CRI, 4000K **930**=90CRI, 3000K **935**=90CRI, 3500K **940**=90CRI, 4000K **950**=90CRI, 5000K **AMB**=Amber[14,16]	**U**=120-277V **H**=347V-480V [7,29] **1**=120V **2**=208V **3**=240V **4**=277V **8**=480V [7,29] **9**=347V [7] **DV**=277V-480V DuraVolt Drivers [28,29,30]	**T1**=Type I **T2**=Type II **T2R**=Type II Roadway **T3**=Type III **T3R**=Type III Roadway **T4FT**=Type IV Forward Throw **T4W**=Type IV Wide **5NQ**=Type V Narrow **5MQ**=Type V Square Medium **5WQ**=Type V Square Wide **SL2**=Type II w/Spill Control **SL3**=Type III w/Spill Control **SL4**=Type IV w/Spill Control **SLL**=90° Spill Light Eliminator Left **SLR**=90° Spill Light Eliminator Right **RW**=Rectangular Wide Type I **AFL**=Automotive Frontline	**[Blank]**=Standard Pole Mount Arm **QU**=Quick Mount Universal Arm **QM**=Pole Mount Arm with Quick Mount Adaptor **PA**=Pole Mount, Adjustable **SP**=3" Slipfitter, Adjustable [8] **SP2**=2-3/8" Slipfitter, Adjustable [8] **QMA**=Quick Mount Mast Arm, Fixed **MA**=Mast Arm, Fixed **WM**=Wall Mount, Fixed **WA**=Wall Mount, Adjustable **UP**=Upswept Arm	**AP**=Grey **BZ**=Bronze **BK**=Black **DP**=Dark Platinum **GM**=Graphite Metallic **WH**=White **RALXX**=Custom Color

Options (Add as Suffix)	Controls and Systems Options (Add as Suffix)	Accessories (Order Separately) [27]
DIM=External 0-10V Dimming Leads [19] **F**=Single Fuse (120, 277 or 347V Specify Voltage) **FF**=Double Fuse (208, 240 or 480V Specify Voltage) **20K**=20kV UL 1449 fused surge protective device [10] **2L**=Two Circuits [10] **HA**=50°C High Ambient [16] **HSS**=Installed House Side Shield [17] **GRSBK**=Glare Reducing Shield, Black [22] **GRSWH**=Glare Reducing Shield, White [22] **LCF**=Light Square Trim Painted to Match Housing [25] **TH**=Tool-less Door Hardware [5] **CC**=Coastal Construction finish [3] **L90**=Optics Rotated 90° Left **R90**=Optics Rotated 90° Right **AHD145**=After Hours Dim, 5 Hours [21] **AHD245**=After Hours Dim, 6 Hours [21] **AHD255**=After Hours Dim, 7 Hours [21] **AHD355**=After Hours Dim, 8 Hours [21] **DALI**=DALI Drivers	**BPC**=Button Type Photocontrol. Must specify voltage 120V, 208V, 240V or 277V. [6] **PR**=NEMA 3-PIN Photocontrol Receptacle **PR7**=NEMA 7-PIN Photocontrol Receptacle [20] **FADC**=Field Adjustable Dimming Controller [31] **PSC**=Photocontrol Shorting Cap **SPB2**=Dimming Motion Sensor, 9'-20' mounting [23] **SPB4**=Dimming Motion Sensor, 21'-40' mounting [23] **SPB2/X**=Dimming Motion Sensor, limited square count, 9'-20' mounting [23] **SPB4/X**=Dimming Motion Sensor, limited square count, 21'-40' mounting [23] **MS/DIM-L20**=Motion Sensor for Dimming Operation, 9'-20' Mounting [33] **MS/DIM-L40**=Motion Sensor for Dimming Operation, 21'-40' Mounting [33] **WLS2XX**=WaveLinx LITE, SR Driver, Dimming Motion and Daylight, Bluetooth Programmable, 7' - 15' Mounting [18,12,34] **WLS4XX**=WaveLinx LITE, SR Driver, Dimming Motion and Daylight, Bluetooth Programmable, 15' - 40' Mounting [18,12,34] **WPS2XX**=WaveLinx PRO, SR Driver, Dimming Motion and Daylight, WAC Programmable, 7' - 15' Mounting [18,12,13,34] **WPS4XX**=WaveLinx PRO, SR Driver, Dimming Motion and Daylight, WAC Programmable, 15' - 40' Mounting [18,12,13,34] **DIM10-L20**=AirMesh Occupancy Sensor (9'-20' Mounting) [18,36] **DIM10-L40**=AirMesh Occupancy Sensor (21'-40' Mounting) [18,36]	**OA/RA1016**=NEMA Photocontrol Multi-Tap - 105-285V **OA/RA1027**=NEMA Photocontrol - 480V **OA/RA1201**=NEMA Photocontrol - 347V **OA/RA1013**=Photocontrol Shorting Cap **OA/RA1014**=120V Photocontrol **MA1252**=10kV Surge Module Replacement **MA1036-XX**=Single Tenon Adapter for 2-3/8" O.D. Tenon **MA1037-XX**=2@180° Tenon Adapter for 2-3/8" O.D. Tenon **MA1197-XX**=3@120° Tenon Adapter for 2-3/8" O.D. Tenon **MA1188-XX**=4@90° Tenon Adapter for 2-3/8" O.D. Tenon **MA1189-XX**=2@90° Tenon Adapter for 2-3/8" O.D. Tenon **MA1190-XX**=3@90° Tenon Adapter for 2-3/8" O.D. Tenon **MA1191-XX**=2@120° Tenon Adapter for 2-3/8" O.D. Tenon **MA1038-XX**=Single Tenon Adapter for 3-1/2" O.D. Tenon **MA1039-XX**=2@180° Tenon Adapter for 3-1/2" O.D. Tenon **MA1192-XX**=3@120° Tenon Adapter for 3-1/2" O.D. Tenon **MA1193-XX**=4@90° Tenon Adapter for 3-1/2" O.D. Tenon **MA1194-XX**=2@90° Tenon Adapter for 3-1/2" O.D. Tenon **MA1195-XX**=3@90° Tenon Adapter for 3-1/2" O.D. Tenon **SRA238**=Adapter kit for mounting 3" SP arm to 2-3/8" O.D. vertical tenon **FSIR-100**=Wireless Configuration Tool for MS/DIM [33] **LS/HSS**=Field Installed House Side Shield [9,17] **LS/GRSBK-2PK** =Glare Reducing Shield, Black [9,22] **LS/GRSWH-2PK** =Glare Reducing Shield, White [9,22] **LS/PFS**=Perimeter Shield, Black [15] **WOLC-7P-10A**=WaveLinx Outdoor Control Module [11,18,36] **TL7-G1-HV**= AirMesh 7-PIN node, 110-480V [11,18,36] **CBSSW-450-002**= AirMesh central base station with 5-button control

NOTES:
1. Customer is responsible for engineering analysis to confirm pole and fixture compatibility for all applications. Refer to our white paper WP513001EN for additional support information.
2. DesignLights Consortium® Qualified. Refer to www.designlights.org Qualified Products List under Family Models for details.
3. Coastal construction finish salt spray tested to over 5,000-hours per ASTM B117, with a scribe rating of 9 per ASTM D1654. Not available with TH option.
4. When using SA light squares, Output Level 4 not available with color temperatures 722, 727, 827, 830 or 930 when HSS is used.
5. TH option not 3G rated. Not available with Coastal Construction (CC) option.
6. Not available with voltage options H, 8 or 9.
7. Not available with SB1A or SB2A configurations. Not available in combination with HA high ambient and sensor options at Output Level 3. H voltage not available with sensor options, choose voltage 8 or 9.
8. SP arm limited to 3" O.D. vertical tenon. SP2 limited to 2-3/8" O.D. vertical tenon.
9. One required for each Light Square.
10. 2L is not available with SB light squares. Not available with SPB at 347V or 480V. Not available with WaveLinx or 20kV surge option.
11. Requires PR7.
12. Replace XX with sensor color (WH, BZ or BK.).
13. WAC Gateway required to enable field-configurability: Order WAC-PoE and WPOE-120 (10V to PoE injector) power supply if needed. WAC not required for LC Bluetooth sensors.
14. Narrow-band 590nm +/- 5nm for wildlife and observatory use. Choose Output Level 1; supplied at 500mA drive current only. Not available with SB light squares. Exact luminaire wattage available in IES files. Available with 5WQ, 5MQ, SL2, SL3 and SL4 distributions. Can be used with HSS option.
15. Set of 4 pcs. One set required per Light Square.
16. HA option not available with Output Level 4 or AMB Amber.
17. Not for use with T1, 5NQ, 5MQ, 5WQ or RW optics.
18. Cannot be used with other control options.
19. Low voltage control lead brought out 18" outside fixture. Not available with DALI or integrated controls options.
20. Not available if any SPB, LWR, or WaveLinx sensor is selected. Motion sensor has an integral photocell.
21. Requires the use of BPC photocontrol or the PR7 or PR photocontrol receptacle with photocontrol accessory. Not available with SB light squares when using Output Level 4.
22. Not for use with T1, T4FT, T4W or SL optics. See IES files for details. Not available with SB light squares.
23. Sensor configuration mobile application required for configuration. See controls page for details.
24. Replace X with number of Light Squares controlled by the SPB, referencing the "SPB/X Availability Table" on the controls page.
25. Not available with HSS, GRSWH or GRSBK.
26. Only product configurations with these designated prefixes are built to be compliant with the Buy American Act of 1933 (BAA) or Trade Agreements Act of 1979 (TAA), respectively. Please refer to DOMESTIC PREFERENCES website for more information. Components shipped separately may be separately analyzed under domestic preference requirements.
27. For BAA or TAA requirements, Accessories sold separately will be separately analyzed under domestic preference requirements. Consult factory for further information.
28. DuraVolt drivers feature added protection from power quality issues such as loss of neutral, transients and voltage fluctuations. Visit www.signify.com/duravolt for more information.
29. 480V not to be used with ungrounded or impedance grounded systems.
30. Not available with SA1A or SA1B. Not available with SB1, or any SB configuration using Output Level 1. Not available with any control option except SPB
31. Cannot be used with DALI, PR7, or other motion response control options. Not available with SB light squares when using Output Level 4.
32. Use GALN Product Configurator to specify lumen output, drive current and wattage. Not available with AMB. Not available with SB light squares.
33. Uses the FSP-211 motion sensor. The FSIR-100 configuration tool is required to adjust parameters including high and low modes, sensitivity, time delay, cutoff and more. Consult your lighting representative at Cooper Lighting Solutions for more information.
34. Controls system is not available with photocontrol receptacles (PR , PR7) or other controls systems (FADC, SPBx).
35. Available with T1, T2, T3, T4FT, SL4 and 5WQ distributions.
36. Requires AirMesh central base station CBSSW-450-002 and Synapse commissioning for operation.

Project		Catalog #		Type	
Prepared by		Notes		Date	

McGraw-Edison
GWC Galleon Wall

Wall Mount Luminaire

Product Features

Light ARchitect™ · BAA · FADC

Product Certifications

DLC Listed[1] · DLC Listed Premium[1] · ISO · UL Certified · FC Class A · IP66 · IDA Dark Sky Approved[2] · 5 Year

Interactive Menu

- Ordering Information page 2
- Product Specifications page 2
- Optical Configurations page 3
- Energy and Performance Data page 4
- Control Options page 6

Quick Facts

- Choice of thirteen high-efficiency, patented AccuLED Optics
- Downward and inverted wall mounting configurations
- Eight lumen packages from 3,215 up to 17,056
- Efficacies up to 154 lumens per watt

Connected Systems

- WaveLinx PRO Wireless
- WaveLinx LITE Wireless
- Enlighted

Dimensional Details

Net Weight: 17.0 lbs (7.7 kgs)

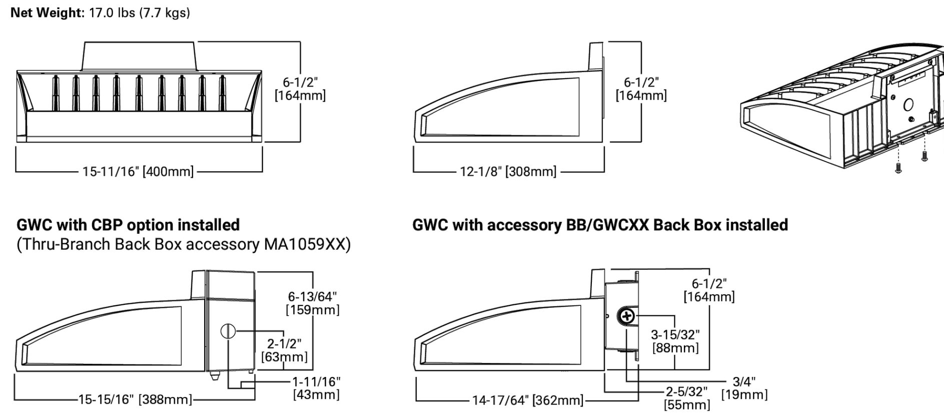

NOTES:
1. Visit https://www.designlights.org/search/ to confirm qualification. Not all product variations are DLC qualified.
2. IDA Certified for 3000K CCT and warmer only.

McGraw-Edison — GWC Galleon Wall

Ordering Information

SAMPLE NUMBER: **GWC-SA2C-740-U-T4FT-GM**

Product Family [1]	Light Engine: Configuration	Light Engine: Drive Current	Color Temperature	Voltage	Distribution	Finish
GWC=Galleon Wall **BAA-GWC**=Galleon Wall, Buy American Act Compliant [34] **TAA-GWC**=Galleon Wall, Trade Agreements Act Compliant [34]	**SA1**=1 Square **SA2**=2 Squares [2]	**A**=615mA **B**=800mA **C**=1000mA **D**=1200mA [4] **Z**=Configured [40]	**722**=70CRI, 2200K **727**=70CRI, 2700K **730**=70CRI, 3000K **735**=70CRI, 3500K **740**=70CRI, 4000K **750**=70CRI, 5000K **760**=70CRI, 6000K **827**=80CRI, 2700K **830**=80CRI, 3000K **AMB**=Amber, 590nm [3,4]	**U**=120-277V **1**=120V **2**=208V **3**=240V **4**=277V **8**=480V [6,7] **9**=347V [6] **DV**=277-480V DuraVolt Drivers [7,8,36]	**T2**=Type II **T3**=Type III **T4FT**=Type IV Forward Throw **T4W**=Type IV Wide **SL2**=Type II w/Spill Control **SL3**=Type III w/Spill Control **SL4**=Type IV w/Spill Control **SLL**=90° Spill Light Eliminator Left **SLR**=90° Spill Light Eliminator Right **RW**=Rectangular Wide Type I **5NQ**=Type V Square Narrow **5MQ**=Type V Square Medium **5WQ**=Type V Square Wide	**AP**=Grey **BZ**=Bronze **BK**=Black **DP**=Dark Platinum **GM**=Graphite Metallic **WH**=White

Options (Add as Suffix)	Controls and Systems Options (Add as Suffix)	Accessories (Order Separately) [35]
F=Single Fused (120, 277 or 347V. Must Specify Voltage) **FF**=Double Fused (208, 240 or 480V. Must Specify Voltage) **10K**=10kV Surge Module **20K**=Series 20kV UL 1449 Surge Protective Device **2L**=Two-Circuit Light Engine [37] **DIM**=External 0-10V Dimming Leads [9,10] **CBP**=Battery Pack with Back Box, Cold Weather Rated [2,4,14,32] **CBP-CEC**=Battery Pack with Back Box, Cold Weather Rated, CEC compliant [2,4,14] **BB**=Shipped with Back Box Accessory [38] **L90**=Optics Rotated 90° Left **R90**=Optics Rotated 90° Right **HSS**=Factory Installed House Side Shield [23] **GRSBK**=Factory Installed Glare Shield, BK [4,27] **GRSWH**=Factory Installed Glare Shield, WH [4,27] **UPL**=Uplight Housing [13] **HA**=50°C High Ambient [12] **LCF**=Light Square Trim Plate Painted to Match Housing [22] **MT**=Factory Installed Mesh Top **CC**=Coastal Construction finish [5] **CE**=CE Marking and Small Terminal Block [24] **AHD145**=After Hours Dim, 5 Hours [16] **AHD245**=After Hours Dim, 6 Hours [16] **AHD255**=After Hours Dim, 7 Hours [16] **AHD355**=After Hours Dim, 8 Hours [16] **DALI**=DALI Driver [11]	**BPC**=Button Type Photocontrol (120, 208, 240 or 277V. Must Specify Voltage) **PR**=NEMA 3-PIN Twistlock Photocontrol Receptacle **PR7**=NEMA 7-PIN Twistlock Photocontrol Receptacle [15] **FADC**=Field Adjustable Dimming Controller [39] **SPB1=**Dimming Occupancy Sensor with Bluetooth Interface, <8' Mounting [19,33] **SPB2=**Dimming Occupancy Sensor with Bluetooth Interface, 8' - 20' Mounting [19,33] **SPB4=**Dimming Occupancy Sensor with Bluetooth Interface, 21' - 40' Mounting [19,33] **MS-LXX**=Motion Sensor for On/Off Operation [17,18,19] **MS/DIM-LXX**=Motion Sensor for Dimming Operation [17,18,19] **WPS2XX**=WaveLinx Pro, SR Driver, Dimming Motion and Daylight, WAC Programmable, 7' - 15' Mounting [30,31,41] **WPS4XX**=WaveLinx Pro, SR Driver, Dimming Motion and Daylight, WAC Programmable, 15' - 40' Mounting [30,31,41] **WLS2XX**=WaveLinx Lite, SR Driver, Dimming Motion and Daylight, Bluetooth Programmable, 7' - 15' Mounting [31,41] **WLS4XX**=WaveLinx Lite, SR Driver, Dimming Motion and Daylight, Bluetooth Programmable, 15' - 40' Mounting [31,41] **LWR-LW**=Enlighted Wireless Sensor, Wide Lens for 8'-16' Mounting Height [19,20,21] **LWR-LN**=Enlighted Wireless Sensor, Narrow Lens for 16'-40' Mounting Height [19,20,21]	**OA/RA1013**=Photocontrol Shorting Cap **OA/RA1016**=NEMA Photocontrol - Multi-Tap 105-285V **OA/RA1201**=NEMA Photocontrol - 347V **OA/RA1027**=NEMA Photocontrol - 480V **MA1252**=10kV Circuit Module Replacement **MA1059XX**=Thru-branch Back Box (Must Specify Color) **BB/GWCXX**=Back Box (Must Specify Color) **LS/HSS**=Field Installed House Side Shield [23,25] **LS/GRSBK-2PK**=Glare Shield, Black [25,27] **LS/GRSWH-2PK**=Glare Shield, White [25,27] **LS/PFS**=Perimeter Shield, Black [28] **FSIR-100**=Wireless Configuration Tool for Occupancy Sensor [17] **WOLC-7P-10A**=WaveLinx Outdoor Control Module (7-pin) [26,29]

NOTES:
1. DesignLight Consortium® Qualified. Refer to www.designlights.org, Qualified Products List under Family Models for details.
2. Two light squares with CBP options limited to 25°C. CBP not available in combination with sensor options at 1200mA.
3. Narrow-band 590nm +/- 5nm for wildlife and observatory use. Choose drive current A; supplied at 500mA drive current only.Exact luminaire wattage available in IES files. Available with 5WQ, 5MQ, SL2, SL3 and SL4 distributions. Can be used with HSS option.
4. Not available with HA option.
5. Coastal construction finish salt spray tested to over 5,000-hours per ASTM B117, with a scribe rating of 9 per ASTM D1654.
6. Require the use of a step down transformer. Not available in combination with sensor options at 1200mA.
7. 480V not to be used with ungrounded or impedance grounded systems.
8. DuraVolt drivers feature added protection from power quality issues such as loss of neutral, transients and voltage fluctuations. Visit www.signify.com/duravolt for more information.
9. Cannot be used with other control options.
10. Low voltage control leads extended 18" from fixture.
11. Not available in 1200mA. When used with CBP or HA options, only available with single light square.
12. Not available in 1200mA, UPL or CBP options. Available with single light square.
13. Not available with SL2, SL3, SL4, HA, CBP, PR or PR7 options.
14. Operates a single light square only. Operates at -20°C to +40°C. Backbox is non-IP rated.
15. Compatible with standard 3-PIN photocontrols, 5-PIN or 7-PIN ANSI controls.
16. Requires the use of BPC photocontrol or the PR7 or PR photocontrol receptacle with photocontrol accessory. See After Hours Dim supplemental guide for additional information.
17. The FSIR-100 configuration tool is required to adjust parameters such as high and low modes, sensitivity, time delay and cutoff. Consult your lighting representative at Cooper Lighting Solutions for more information.
18. Replace LXX with L08 (<8' mounting), L20 (8'-20' mounting) or L40W (21'-40' mounting.)
19. Includes integral photosensor.
20. Enlighted wireless sensors are factory installed requiring network components in appropriate quantities.
21. White sensor shipped on all housing color options.
22. Not available with HSS or GRS options.
23. Not for use with 5NQ, 5MQ, 5WQ or RW optics. The light square trim plate is painted black when the HSS option is selected.
24. CE is not available with the 1200, DALI, LWR, MS, MS/DIM, BPC, PR or PR7 options. Available in 120-277V only.
25. One required for each light square.
26. Requires PR7.
27. Not for use with T4FT, T4W or SL4 optics.
28. Set of 4 pcs. Once set required per Light Square.
29. Cannot be used in conjunction with additional photocontrol or other controls systems (BPC, PR, PR7, MS, LWR).
30. WAC Gateway required to enable field-configurability: Order WAC-PoE and WPOE-120 (10V to PoE injector) power supply if needed.
31. Replace XX with sensor color (WH, BZ, or BK).
32. Specify 120V or 277V.
33. Smart device with mobile application required to change system defaults. See controls section for details.
34. Only product configurations with these designated prefixes are built to be compliant with the Buy American Act of 1933 (BAA) or Trade Agreements Act of 1979 (TAA), respectively. Please refer to DOMESTIC PREFERENCES website for more information. Components shipped separately may be separately analyzed under domestic preference requirements.
35. For BAA or TAA requirements, Accessories sold separately will be separately analyzed under domestic preference requirements. Consult factory for further information.
36. Not available in 1 square configuration at 800mA or below. Not available with any control option except SPB.
37. 2L not available with FF, AHD or DALI options. Controls and/or battery packs operate only one of the two circuits when 2L is specified. 2L with controls options not available with 347V or 480V.
38. Not available with CBP or CBP-CEC options.
39. Cannot be used with PR7 or other motion response control options.
40. Customer specific specifications utilizes standard products with small adjustments to meet unique requirements such as packaging, labels, wattage adjustments, etc.
41. Controls system is not available with photocontrol receptacles (PR , PR7) or other controls systems (FADC, SPBx).

Product Specifications

Construction
- Driver enclosure thermally isolated from optics for optimal thermal performance
- Die-cast aluminum heat sinks
- IP66 rated housing
- 1.5G vibration rated

Optics
- Patented, high-efficiency injection-molded AccuLED Optics technology
- 13 optical distributions
- IDA Certified (3000K CCT and warmer only)

Electrical
- LED driver assembly mounted for ease of maintenance
- Standard with 0-10V dimming
- Optional 10kV or 20kV surge module
- Suitable for operation in -40°C to 40°C ambient environments; Optional 50°C high ambient (HA) configuration
- Luminaire available with the field adjustable dimming controller (FADC) to manually adjust wattage and reduce the total lumen output and light levels. Comes pre-set to the highest position at the lumen output selected

Mounting
- Gasketed and zinc plated rigid steel mounting attachment
- "Hook-N-Lock" mechanism for easy installation

Finish
- Housing finished in super durable TGIC polyester powder coat paint, 2.5 mil nominal thickness
- Heat sink is powder coated black
- RAL and custom color matches available
- Coastal Construction (CC) option available

Typical Applications
- Exterior Wall, Walkway

Warranty
- Five year limited warranty, consult website for details. www.cooperlighting.com/legal

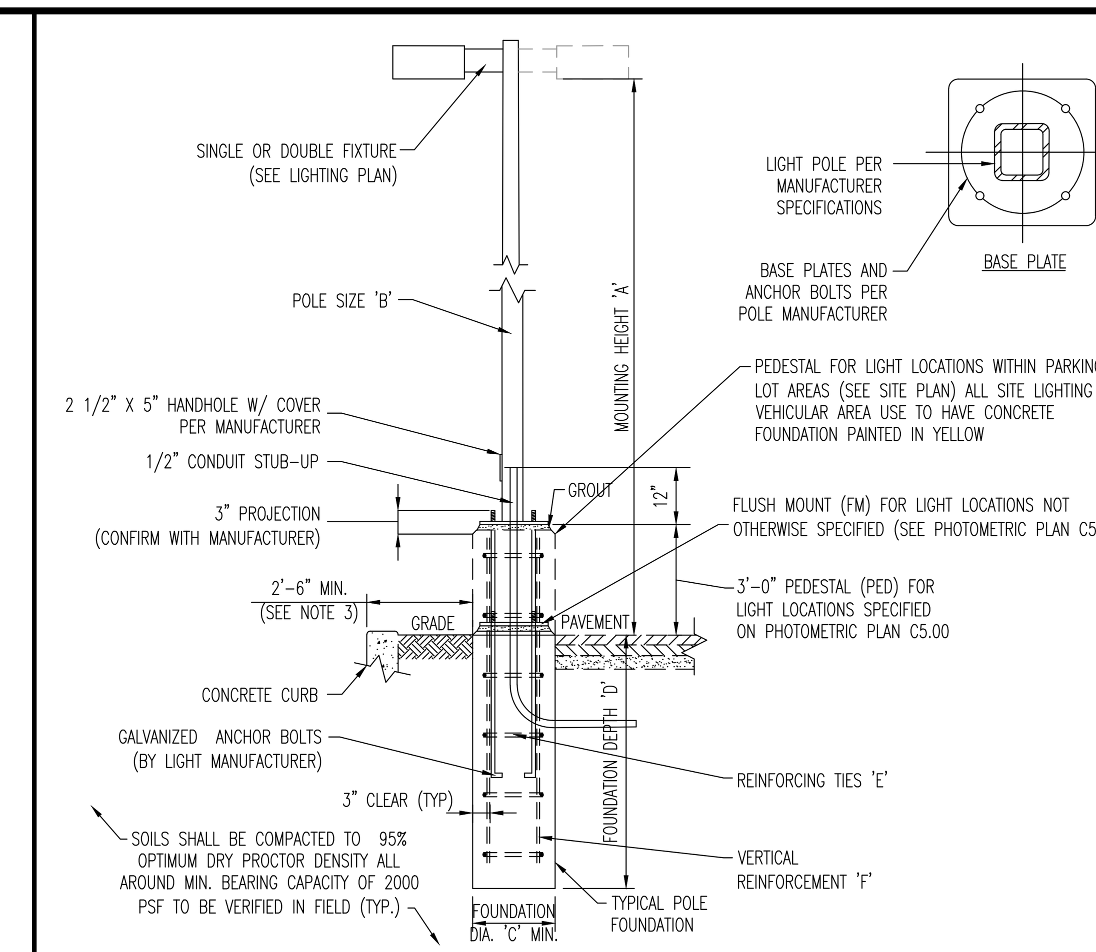

NOTE:
1. CONTRACTOR TO CONFIRM ALL LIGHT POLE & FIXTURE DIMENSIONS PRIOR TO CONSTRUCTION.
2. PROPOSED POLE IN COMBINATION WITH CONCRETE PEDESTAL TO EQUAL MOUNTING HEIGHT 'A'. ACTUAL POLE HEIGHT TO BE ADJUSTED ACCORDINGLY.
3. PROPOSED CONCRETE FOUNDATION AND POLE TO BE CONSTRUCTED WITHIN SUBJECT PROPERTY UNLESS OTHERWISE NOTED. SETBACK FROM CURB IS PREFERRED BUT TO BE ADJUSTED AS NEEDED TO PREVENT ENCROACHMENT OVER PROPERTY LINE.
4. BASE PLATE & ANCHOR BOLTS PER POLE MANUFACTURER. LARGER FOOTING DIAMETER AND/OR ALTERNATE ARANCEMENT OF REINFORCING STEEL MAY BE REQUIRED TO ACCOMMODATE ANCHOR BOLT CONFIGURATION. CONTRACTOR RESPONSIBLE TO COORDINATE DIMENSIONAL REQUIREMENTS FOR BASE PLATE, ANCHOR BOLTS & REINFORCING STEEL PRIOR TO CONSTRUCTION.

LIGHT POLE FOUNDATION SCHEDULE	
MOUNTING HEIGHT ABOVE GRADE 'A'	24'-25'
POLE DIA. 'B'	6" SQUARE (OR PER MANUFACTURER)
# OF FIXTURES	SINGLE, DOUBLE or TRIPLE
FOUNDATION DIAMETER 'C'	18" DIA. ROUND
FOUNDATION DEPTH 'D'	7.5'
REINFORCING TIES 'E'	#4 @ 12" O.C.
VERTICAL REINFORCEMENT 'F'	(6) #6 BARS EQUALLY SPACED

SOIL NOTES
1. FOOTING DESIGN BASED ON ASSUMED MAXIMUM ALLOWABLE SOILS BEARING CAPACITY OF 2,000 SF PSF. CONTRACTOR RESPONSIBLE TO VERIFY ADEQUACY OF ASSUMED BEARING CAPACITY PRIOR TO CONSTRUCTION. ENGINEER TO BE NOTIFIED IF INCONSISTENCIES EXIST.
2. SUBGRADE TO BE FREE OF ORGANICS AND BE SUITABLE, COMPACTED MATERIAL.

CONCRETE NOTES
1. CONCRETE SHALL HAVE A MINIMUM COMPRESSIVE STRENGTH OF 4,000 PSI AT 28 DAYS WITH A MINIMUM CEMENT CONTENT OF 600 POUNDS PER CUBIC YARD FOR ALL FOOTINGS.
2. ALL CONCRETE SHALL HAVE A SLUMP OF NO GREATER THAN 4" TO WITHIN A TOLERANCE OF 1".
3. ALL EXPOSED CONCRETE SHALL BE AIR-ENTRAINED (WITHIN 1% TOLERANCE), CONFORMING TO ASTM C260.
4. REINFORCING FRAMEWORK AND PLACEMENT OF CONCRETE SHALL COMPLY WITH GOOD CONSTRUCTION PRACTICES AND BE IN ACCORDANCE WITH ALL LOCAL GOVERNING CODES AND REGULATIONS AS WELL AS THE ACI AND UNIFORM BUILDING CODE.

AREA LIGHT FOUNDATION DETAIL

NOT TO SCALE

DYNAMIC • ENGINEERING • EARTH • SURVEY • TRAFFIC

REV.	DATE	COMMENTS	BY

THIS PLAN SET IS FOR PERMITTING PURPOSES ONLY AND MAY NOT BE USED FOR CONSTRUCTION

DRAWN BY: SRM | DESIGNED BY: EC | CHECKED BY: AP | CHECKED BY: –

PROJECT: **LT 20, LLC**
PROPOSED WAREHOUSE ADDITION
PARCEL ID# 4842-26-00-0371
115 NW 16TH STREET
POMPANO BEACH, BROWARD COUNTY, FL 33060

DYNAMIC ENGINEERING
LAND DEVELOPMENT CONSULTING • PERMITTING
GEOTECHNICAL • ENVIRONMENTAL
TRAFFIC • SURVEY • PLANNING & ZONING
100 NE 5th Avenue
Suite B2
Delray Beach, FL 33483
T: 561.921.8570
Offices conveniently located throughout the United States:
New Jersey | Delaware | Florida | Maryland | Pennsylvania | Texas
Florida Certificate of Authorization No. 32535
www.dynamicec.com

ANGEL PIÑERO — Digitally signed by Angel Pinero Lugo Date: 2025.05.28 10:05:17-04'00'
ANGEL PIÑERO No. 88047 STATE OF FLORIDA PROFESSIONAL ENGINEER
PROFESSIONAL ENGINEER FLORIDA LICENSE No. 88047 DATE:

ANGEL PINERO LUGO, STATE OF FLORIDA PROFESSIONAL ENGINEER, LICENSE NO. 88047. THIS ITEM HAS BEEN DIGITALLY SIGNED AND SEALED BY ANGEL PINERO LUGO, P.E. ON 05/28/2025. PRINTED COPIES OF THIS DOCUMENT ARE NOT CONSIDERED SIGNED AND SEALED AND THE SIGNATURE MUST BE VERIFIED ON ANY ELECTRONIC COPIES.

811 Know what's below. Call before you dig.
PROTECT YOURSELF
ALL STATES REQUIRE NOTIFICATION OF EXCAVATORS, DESIGNERS, OR ANY PERSON PREPARING TO DISTURB THE EARTH'S SURFACE ANYWHERE IN ANY STATE
FOR STATE SPECIFIC DIRECT PHONE NUMBERS VISIT: WWW.CALL811.COM

TITLE: **PHOTOMETRIC DETAILS**

SCALE: (H) AS (V) NOTED | DATE: 04/15/2025
PROJECT No: 5758-25-01613
SHEET No: **C5.01** | Rev. #: 0

DRC
PZ25-12000014
07/02/2025

Plotted: 05/27/25 – 4:10 PM, By: kkonkus, – Product Ver: 25.0
File: P:\DECPC PROJECTS\5758 LT 20 LLC\25-01613 Pompano Beach FL\Dwg\Entitlements\D57582501613SD0.dwg, ---> C5.01 PHOTOMETRIC DETAILS

COPYRIGHT © 2025 – DYNAMIC ENGINEERING CONSULTANTS, PC – ALL RIGHTS RESERVED